Dimensions Size;

2PE 108 - SAE C - 4 BOLT

SAE D 13T-8/16
SAE C 14T-12/24

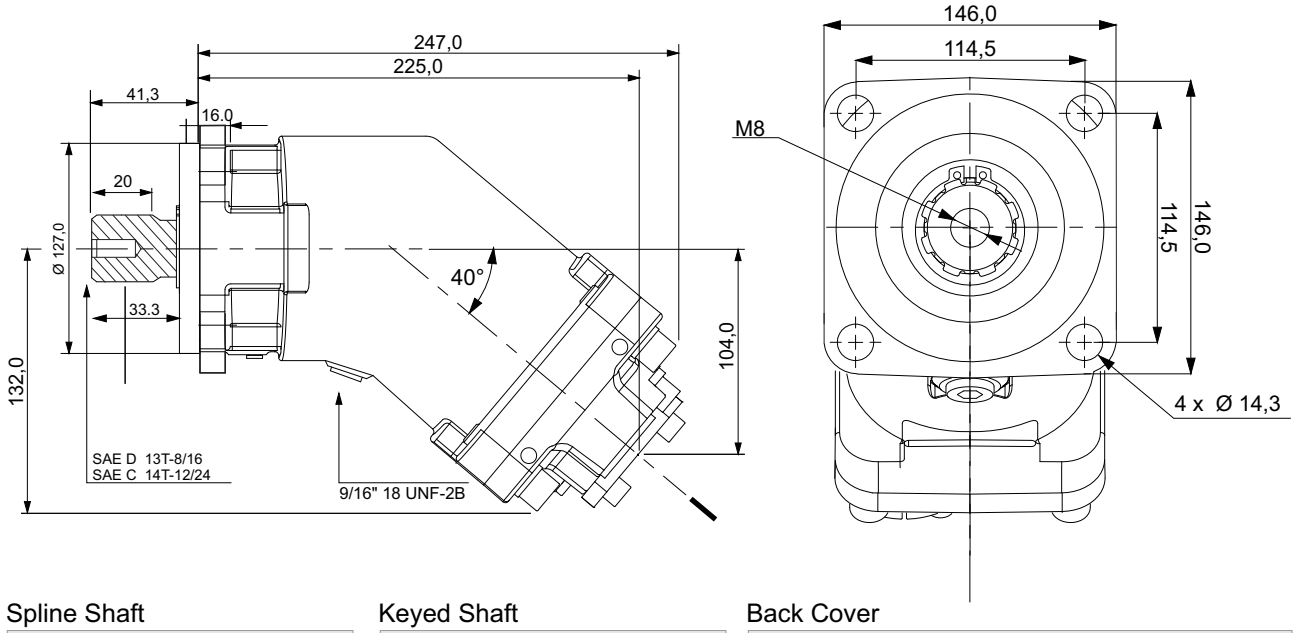

Spline Shaft

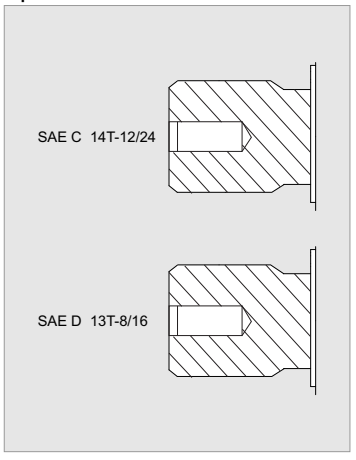

Keyed Shaft

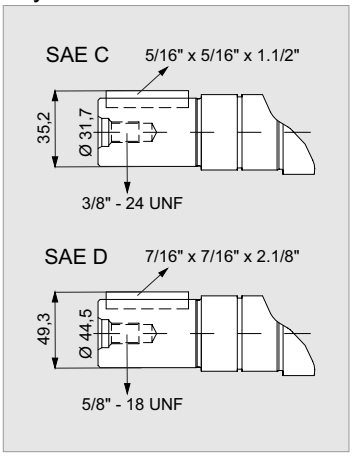

Back Cover

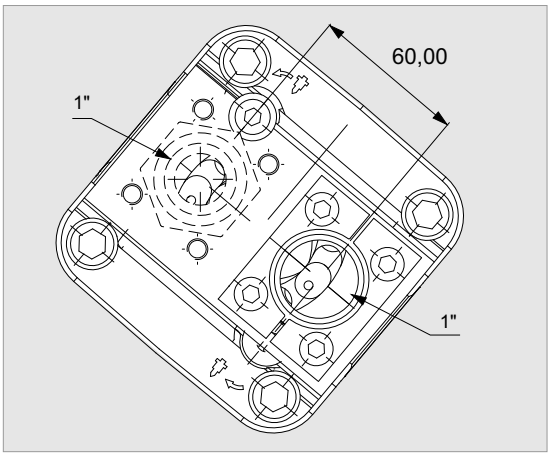

x 1000 rpm	108,40 cc
x 1500 rpm	162,60 cc
Max. Continuous Pump Speed	1700 rpm
Max. Limited Pump Speed	1900 rpm
Max. Continuous Pressure	350 bar
Max. Intermit. Peak Pressure	400 bar
Max. Torque at 350 bar	620 Nm
Weight without inlet fitting	16,50 kg
Weight with inlet fitting	16,90 kg
Rotation	CW-CCW
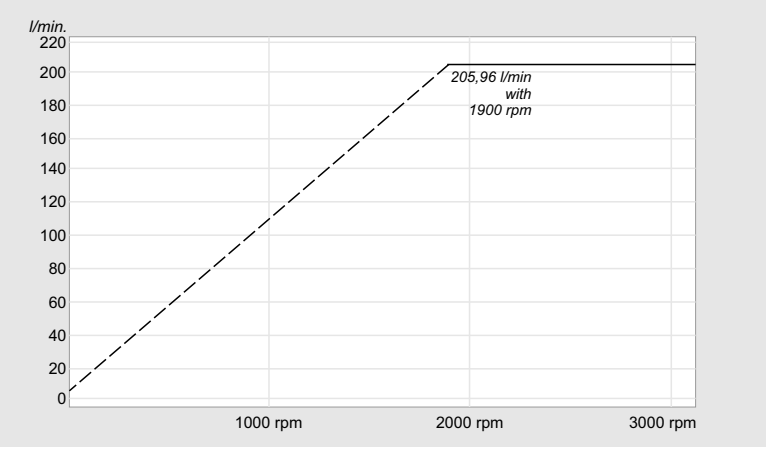
Flow, Speed, Pressure List of 2PE 108