hidrocel®
HİDROLİK PİSTONLU POMPA & MOTOR

2PBM
Hydraulic Piston Motor

2PBM Motors have the following advantages ;

- Compact Design,
- Economical Conception,
- High Power Density,
- High Efficiency,
- High Rotating Speeds,
- From 5cc to 130cc,
- High Pressure,
- Good Starting Characteristics,
- Optimized Weight and Size,

Other Advantages of 2PBM

Interchangeable and Compatible with other DIN Bent Axis Motors,
Special Designed Pistons,
One-Piece Piston with Piston Rings,
For use in stationary and mobile applications,
Compact motor design and extra durable parts,
High Operational Reliability and High Starting Torque
Extra Warranty with Wide Service

40° bent axis design giving high power, small overall dimensions, optimum efficiency and economic design. Flange and shaft designed for direct mounting on the equipments. The fixed displacement bent axis motors generates a hydraulic fluid flow. It is designed for use in trucks, commercial vehicles, construction type equipments and all stationary hydraulic applications. The 2PBM is a motor with rotary group in bent-axis design. Flow is proportional to drive speed and displacement.

For axial piston units with bent-axis design, the Pistons are arranged diagonally with respect to the drive shaft. The motor covers the whole displacement range 5 to 130 cm3/rev. The motor has been developed with modern styling and design to satisfy market demand as to designed new generation plate, extra parts and pistons with give high flow performance, high pressures with high efficiency and very small dimensions.

The motor is available both to DIN and SAE world standards and can be mounted either directly at the gear box or via a drive shaft. Other brand bent axis motors compatible and interchangeable with 2PBM bent axis motors. Refer to the data sheet and order confirmation for the technical data, operating conditions and operating limits of the Hydraulic Piston Motors.

Ordering Code of 2PBM Motors

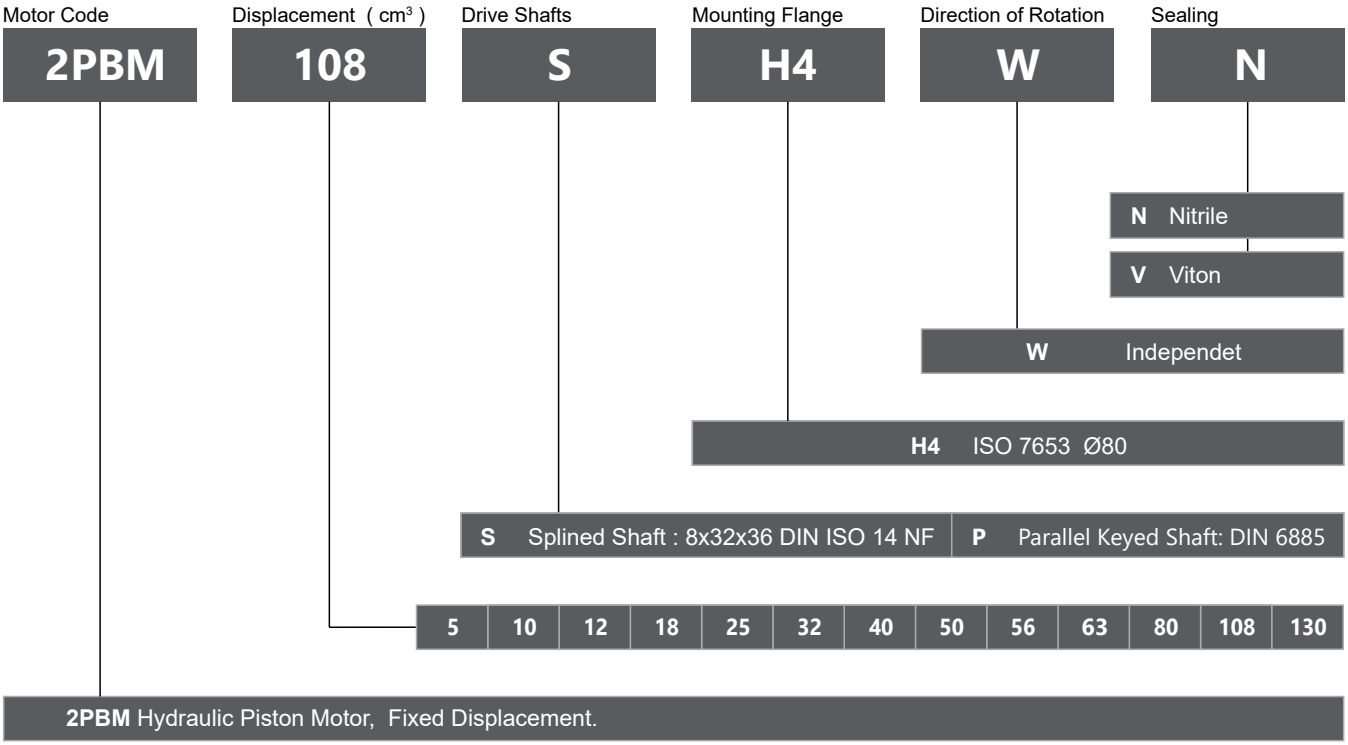

Formulas			
Pump Output Flow	GPM	GPM = (Speed (rpm) × disp. (cu. in.)) / 231	GPM = (n ×d) / 231
Pump Input Horsepower	HP	HP = GPM × Pressure (psi) / 1714 × Efficiency	HP = (Q ×P) / 1714 × E
Pump Efficiency	E	Overall Efficiency = Output HP / Input HP	Eoverall = HPOut / HPIn X 100
		Overall Efficiency = Volumetric Eff. × Mechanical Eff.	EOverall = EffVol. × EffMech.
Pump Volumetric Efficiency	E	Volumetric Efficiency = Actual Flow Rate Output (GPM) / Theoretical Flow Rate Output (GPM) × 100	EffVol. = QAct. / QTheo. X 100
Pump Mechanical Efficiency	E	Mechanical Efficiency = Theoretical Torque to Drive / Actual Torque to Drive × 100	EffMech = TTheo. / TAct. × 100
Pump Displacement	CIPR	Dsplcmnt (In.3 / rev.) = Flow Rate (GPM) × 231 / Pump RPM	CIPR = GPM × 231 / RPM
Pump Torque	T	Torque = Horsepower × 63025 / RPM	T = 63025 × HP / RPM
		Torque = Pressure (PSIG) × Pump Displacement (CIPR) / 2π	T = P × CIPR / 6.28

Horsepower for driving a pump : For every 1 hp of drive, the equivalent of 1 gpm @ 1500 psi can be produced.

Horsepower for idling a pump : To idle a pump when it is unloaded will require about 5% of it's full rated power

Wattage for heating hydraulic oil: Each watt will raise the temperature of 1 gallon of oil by 1° F. per hour.

Flow velocity in hydraulic lines : Pump suction lines 2 to 4 feet per second, pressure lines up to 500 psi - 10 to 15 ft./sec., pressure lines 500 to 3000 psi - 15 to 20 ft./sec.; all oil lines in air-over-oil systems; 4 ft./sec.

Technical Data I

		5	10	12	18	25	32	40	50	56	63	80	108	130
Displacement	***cc***	5,00	10,00	12,00	18,00	25,00	32,00	40,20	50,00	56,40	63,00	80,00	108,4	130,0
Theoretical oil flow l/min at pump speed	***1000 rpm***	5,00	10,00	12,00	18,00	25,00	32,00	40,20	50,00	56,40	63,00	80,00	108,4	130,0
	1500 rpm	7,50	15,00	18,00	27,00	37,50	48,00	60,30	75,00	84,60	94,50	120,0	162,6	195,0
Maximum Speed														
- Continuous	***rpm***	8800	8000	8000	8000	6250	6250	5600	5000	5000	5000	4400	4000	3400
- Intermittent	***rpm***	9400	8800	8800	8800	6800	6800	6300	5500	5500	5500	4900	4400	4400
Max. Continuous Pressure	***bar***	400	400	400	400	400	400	400	400	400	400	400	400	400
Max. Peak Pressure	***bar***	450	450	450	450	450	450	450	450	450	450	450	450	450
Torque bar	***m.N/bar***	0.17	0.17	0.18	0.28	0.40	0.51	0.65	0.80	0.92	1.00	1.28	1.69	2.10
Torque at 350 bar	***m.N***	62	64	66	98	140	174	228	280	320	350	440	600	710
Weight														
- Without accessories	***kg***	9,00	9,00	9,00	10,00	10,00	11,00	11,00	11,00	12,00	12,00	15,00	16,00	16,50
- With accessories	***kg***	9,50	9,50	9,50	10,50	10,50	11,50	11,50	11,50	12,50	12,50	15,50	16,50	17,00
Motor Temperature														
- Minimum	***°C***	-25	-25	-25	-25	-25	-25	-25	-25	-25	-25	-25	-25	-25
- Maximum	***°C***	110	110	110	110	110	110	110	110	110	110	110	110	110

Technical Data II

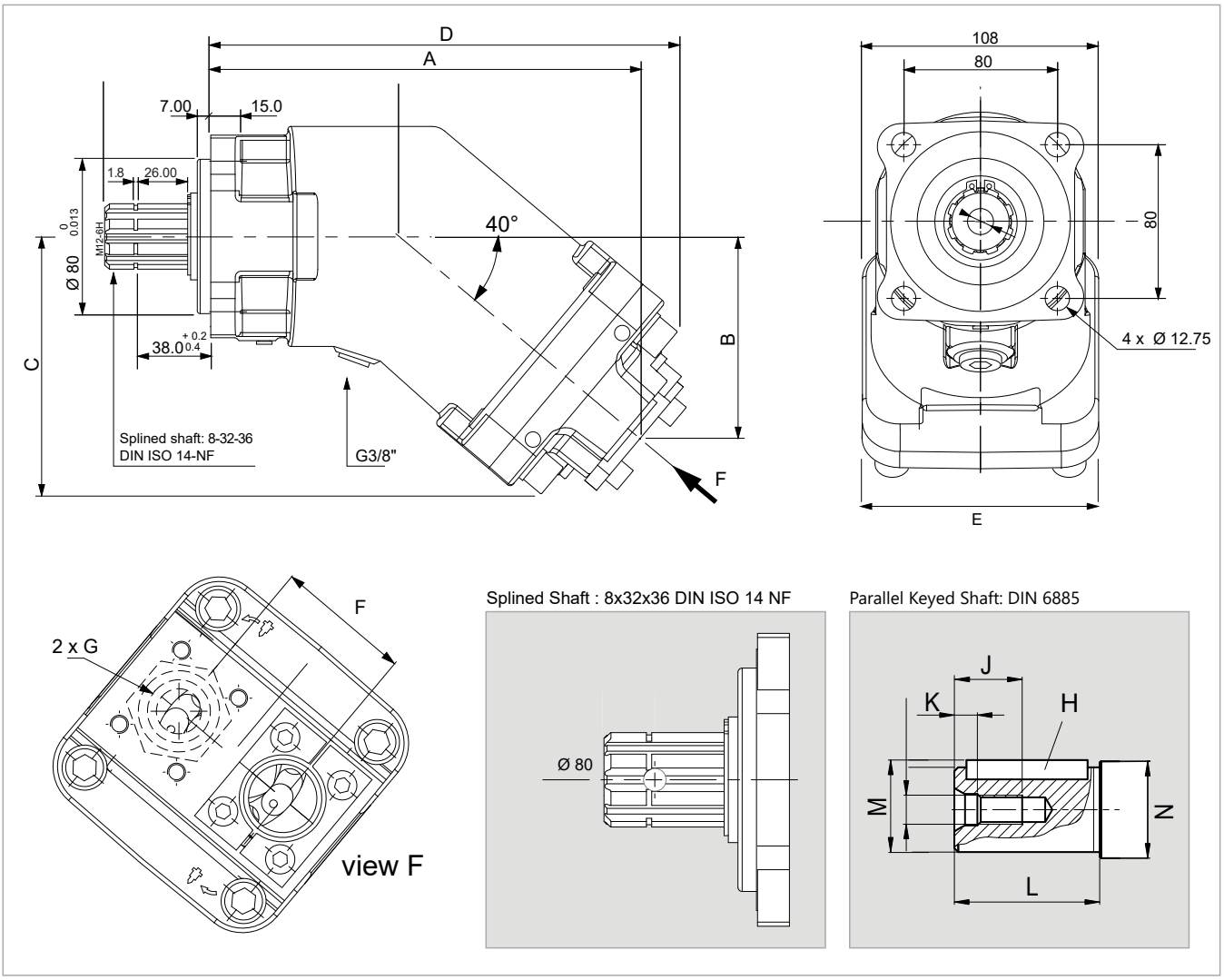

	5	10	12	18	25	32	40	50	56	63	80	108	130
cc	5,00	10,00	12,00	18,00	25,00	32,00	40,20	50,00	56,40	63,00	80,00	108,4	130,0
A	170,0	170,0	170,0	170,0	170,0	177,0	177,0	188,0	188,0	188,0	215,0	215,0	215,0
B	71,0	71,0	71,0	71,0	71,0	76,0	76,0	86,0	86,0	86,0	98,0	98,0	98,0
C	103,0	103,0	103,0	103,0	103,0	108,0	108,0	118,0	118,0	118,0	132,0	132,0	132,0
D	197,0	197,0	197,0	197,0	197,0	202,0	202,0	214,0	214,0	214,0	240,0	240,0	240,0
E	107,5	107,5	107,5	107,5	107,5	107,5	107,5	107,5	107,5	107,5	122,5	122,5	122,5
F	54,0	54,0	54,0	54,0	54,0	54,0	54,0	54,0	54,0	54,0	60,0	60,0	60,0
G	G 3/4"	G 3/4"	G 3/4"	G 3/4"	G 3/4"	G 3/4"	G 3/4"	G 3/4"	G 3/4"	G 3/4"	G 1"	G 1"	G 1"
H	6	6	6	8	8	10	10	10	10	10	12	12	12
J	16	16	16	22	22	28	28	28	28	28	28	28	28
K	5	5	5	7,5	7,5	9,5	9,5	9,5	9,5	9,5	9,5	9,5	9,5
L	40	40	40	50	50	60	60	60	60	60	70	80	70
M	22,5	22,5	22,5	33	33	38	38	38	38	38	38	43	38
N	Ø 28	Ø 28	Ø 28	Ø 35	Ø 35	Ø 35	Ø 35	Ø 40	Ø 40	Ø 40	Ø 45	Ø 50	Ø 45

Performance

Compare Table of Torque

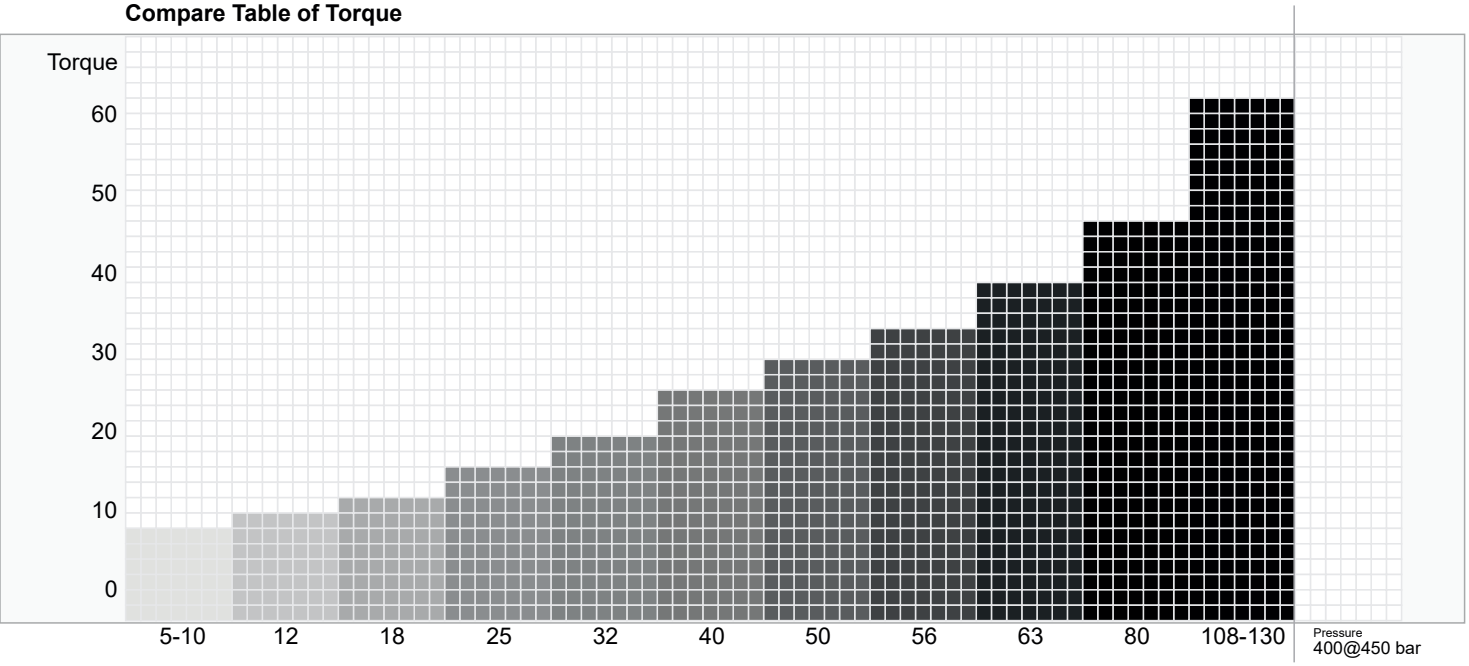

Efficiency of 2PBM Motors (1000 rpm)

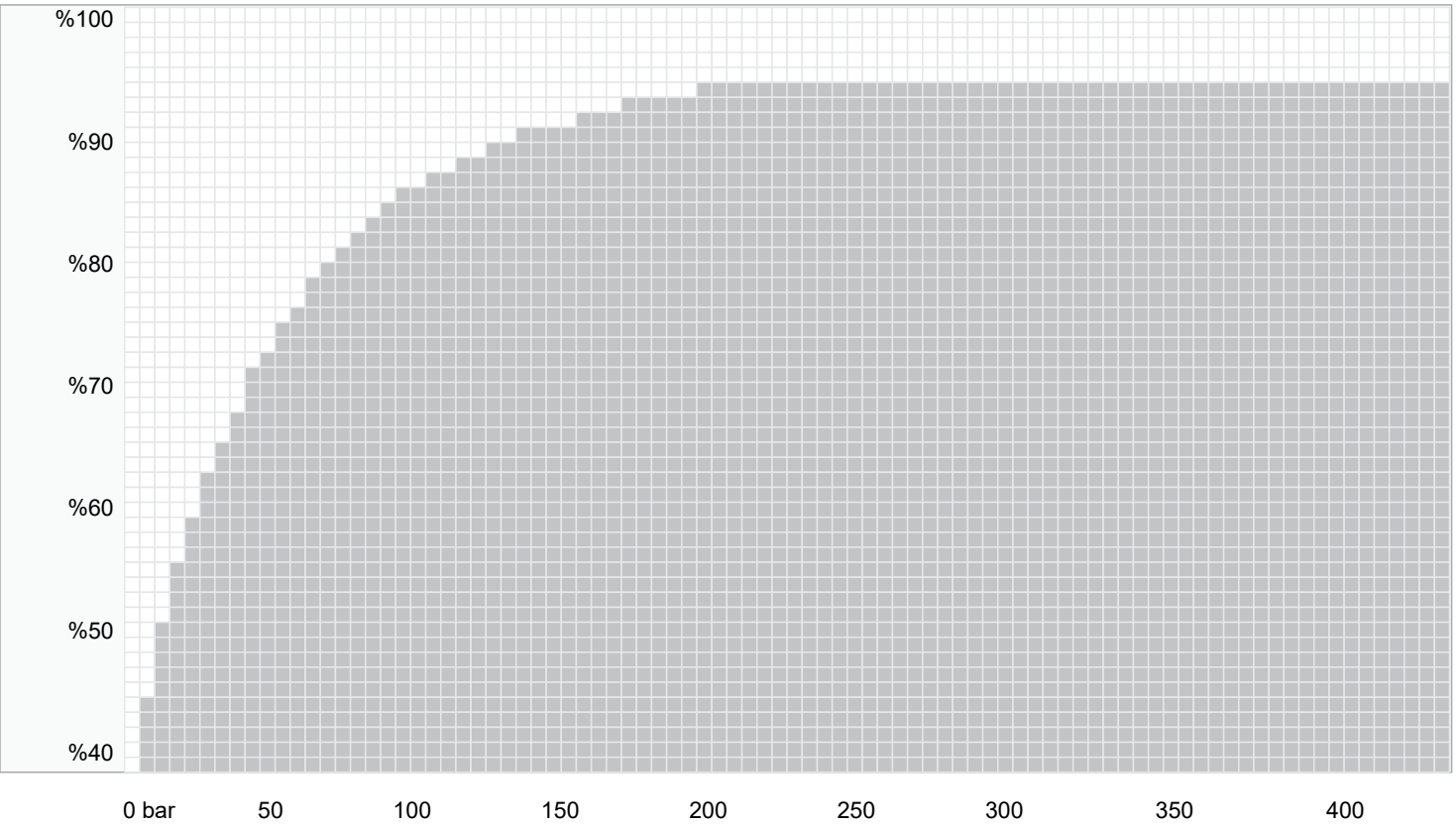

Dimensions Size;

2PBM 12

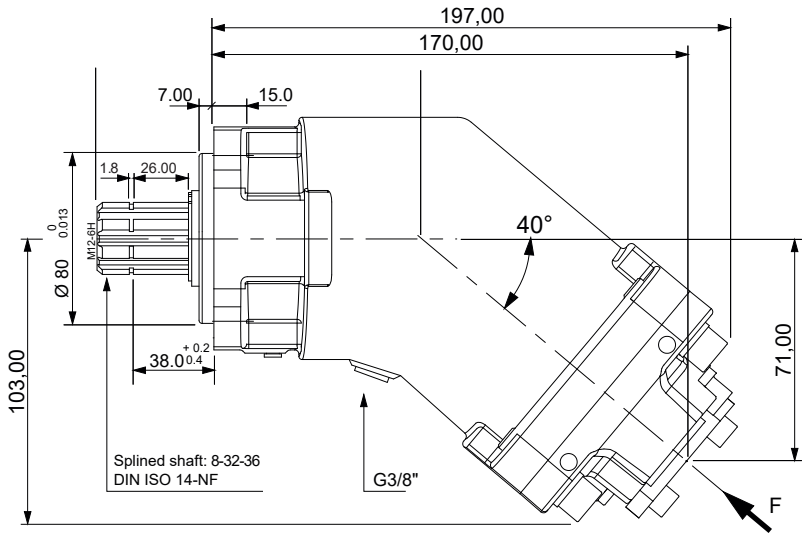

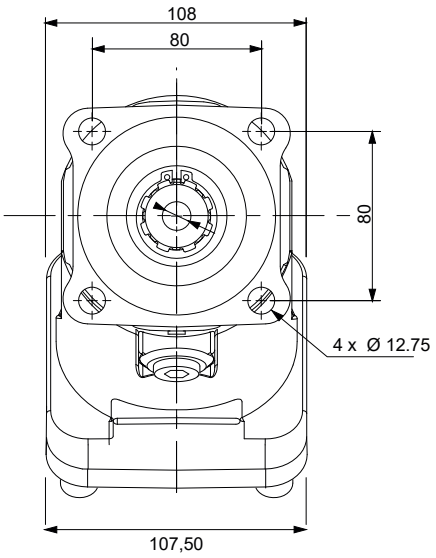

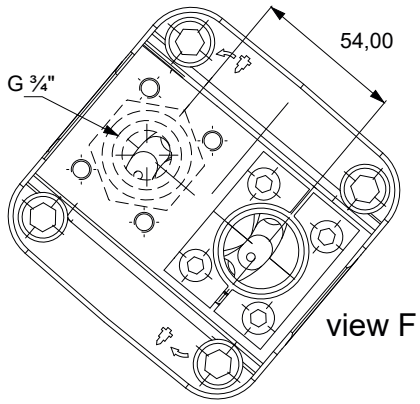

Splined Shaft : 8x32x36 DIN ISO 14 NF

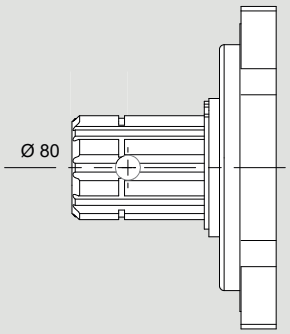

Parallel Keyed Shaft: DIN 6885 6x6x32

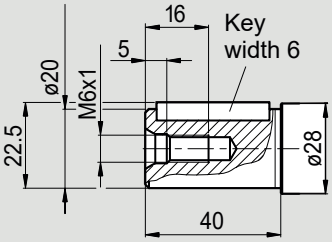

x 1000 rpm	12,00 cc
x 1500 rpm	18,00 cc
Max. Continuous Pump Speed	8000 rpm
Max. Intermittent Pump Speed	8800 rpm
Max. Continuous Pressure	400 bar
Max. Peak Pressure	450 bar
Torque bar	0.18 m.N/bar
Torque at 350 bar	66 m.N
Weight without accessories	9,00 kg
Weight with accessories	9,50 kg
Max. Motor Temperature	-25°
Min. Motor Temperature	110°

Dimensions Size;

2PBM 18

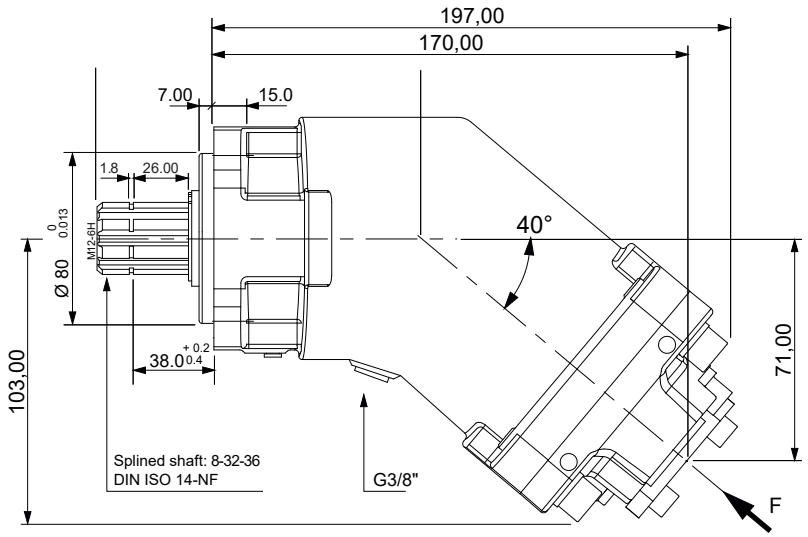

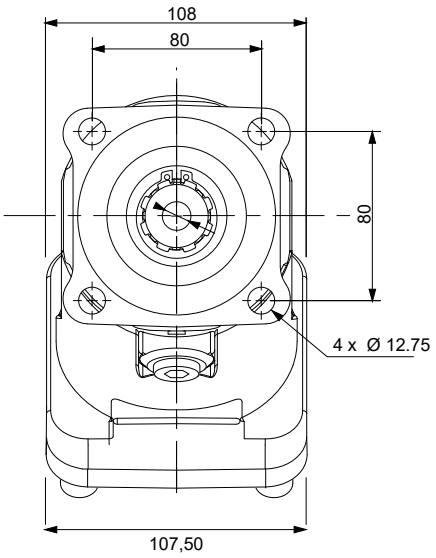

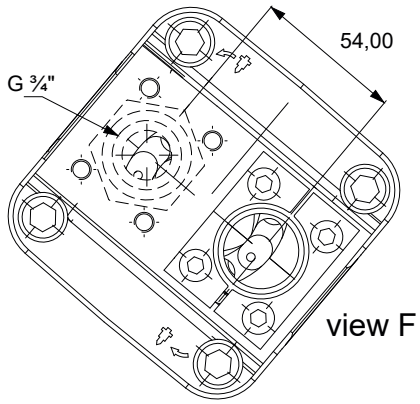

Splined Shaft : 8x32x36 DIN ISO 14 NF

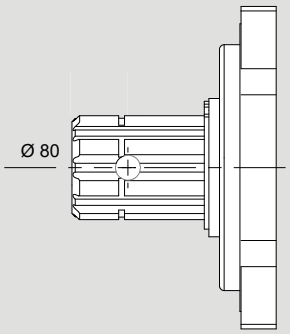

Parallel Keyed Shaft: DIN 6885 8x7x40

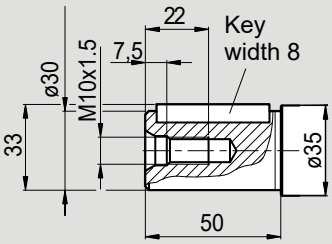

x 1000 rpm	18,00 cc
x 1500 rpm	27,00 cc
Max. Continuous Pump Speed	8000 rpm
Max. Intermittent Pump Speed	8800 rpm
Max. Continuous Pressure	400 bar
Max. Peak Pressure	450 bar
Torque bar	0.28 m.N/bar
Torque at 350 bar	98 m.N
Weight without accessories	10,00 kg
Weight with accessories	10,50 kg
Max. Motor Temperature	-25°
Min. Motor Temperature	110°

Dimensions Size;

2PBM 25

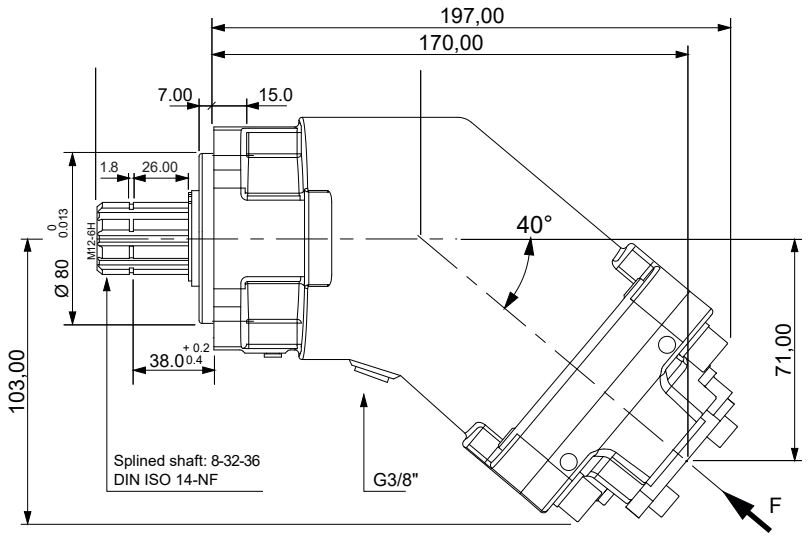

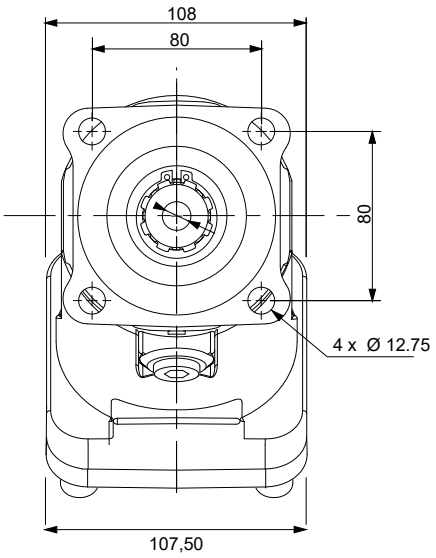

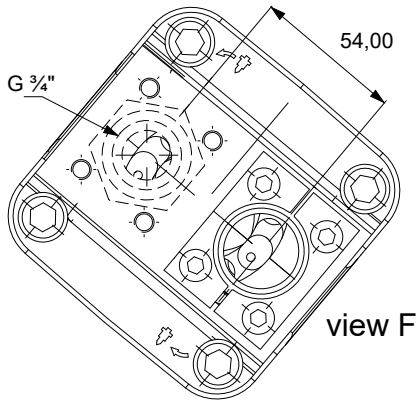

Splined Shaft : 8x32x36 DIN ISO 14 NF

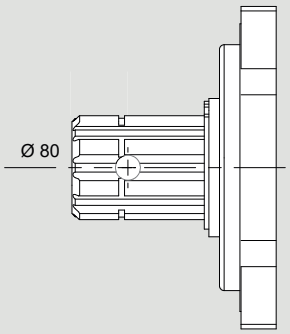

Parallel Keyed Shaft: DIN 6885 8x7x40

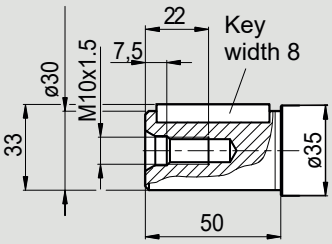

x 1000 rpm	25,00 cc
x 1500 rpm	37,50 cc
Max. Continuous Pump Speed	6250 rpm
Max. Intermittent Pump Speed	6800 rpm
Max. Continuous Pressure	400 bar
Max. Peak Pressure	450 bar
Torque bar	0.40 m.N/bar
Torque at 350 bar	140 m.N
Weight without accessories	10,00 kg
Weight with accessories	10,50 kg
Max. Motor Temperature	-25°
Min. Motor Temperature	110°

Dimensions Size;

2PBM 32

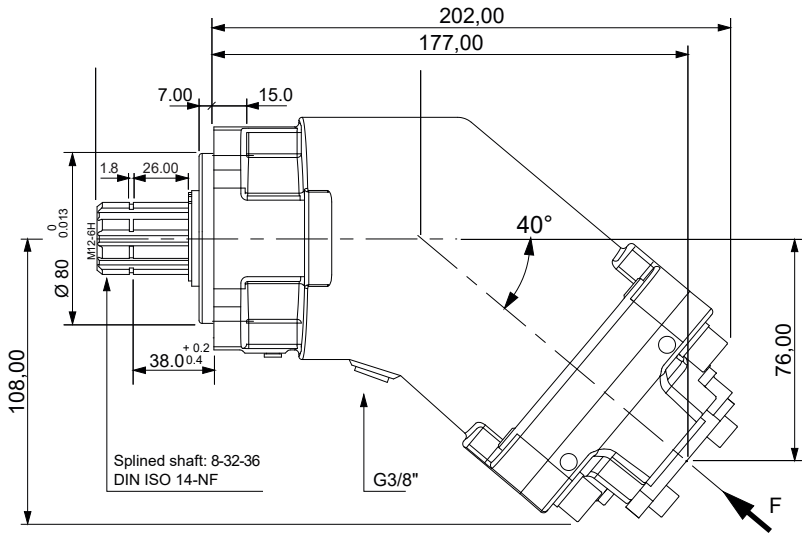

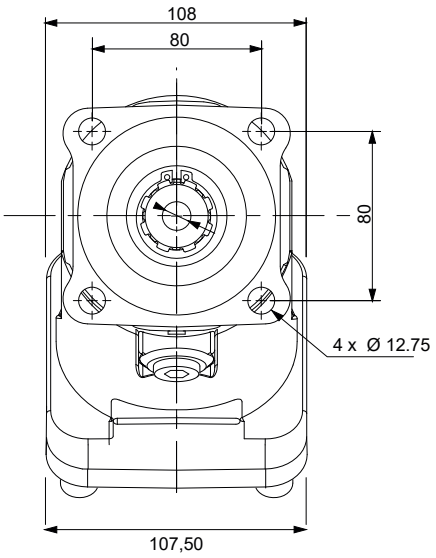

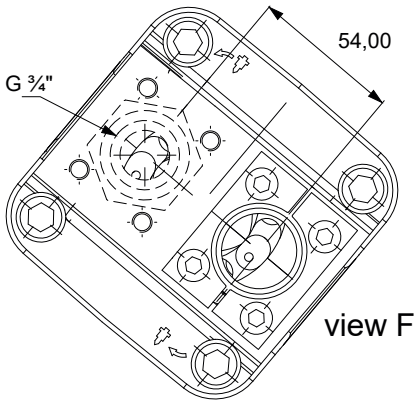

Splined Shaft : 8x32x36 DIN ISO 14 NF

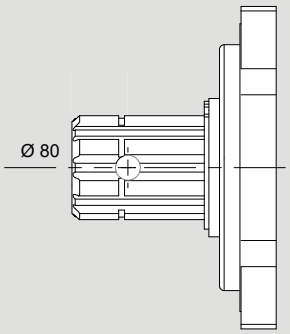

Parallel Keyed Shaft: DIN 6885 8x7x50

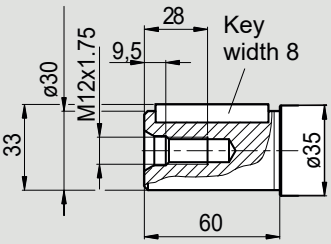

x 1000 rpm	32,00 cc
x 1500 rpm	48,00 cc
Max. Continuous Pump Speed	6250 rpm
Max. Intermittent Pump Speed	6800 rpm
Max. Continuous Pressure	400 bar
Max. Peak Pressure	450 bar
Torque bar	0.51 m.N/bar
Torque at 350 bar	174 m.N
Weight without accessories	11,00 kg
Weight with accessories	11,50 kg
Max. Motor Temperature	-25°
Min. Motor Temperature	110°

Dimensions Size;

2PBM 40

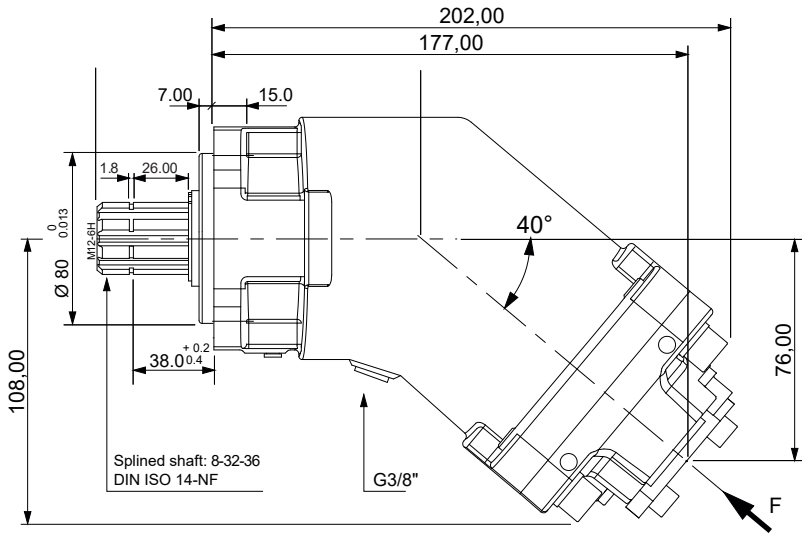

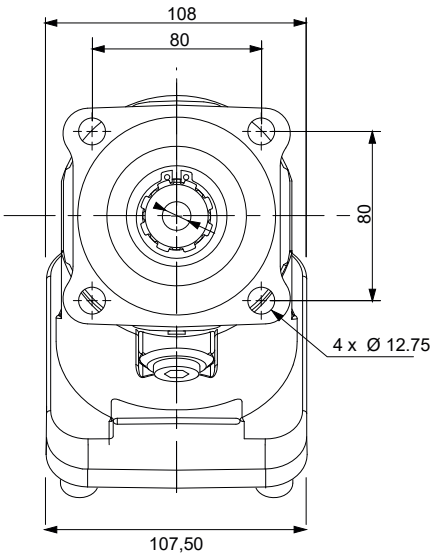

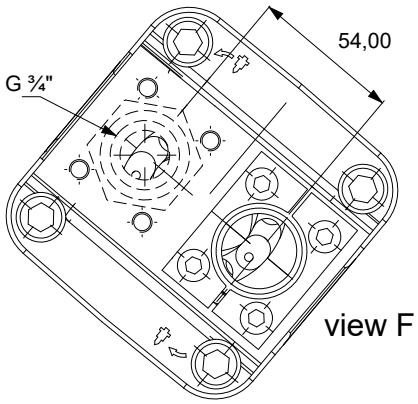

Splined Shaft : 8x32x36 DIN ISO 14 NF

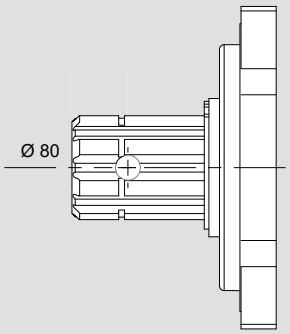

Parallel Keyed Shaft: DIN 6885 8x7x50

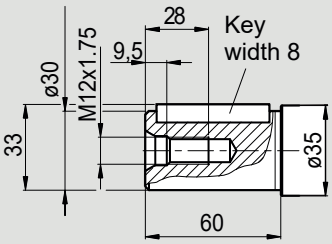

x 1000 rpm	40,20 cc
x 1500 rpm	60,30 cc
Max. Continuous Pump Speed	5600 rpm
Max. Intermittent Pump Speed	6300 rpm
Max. Continuous Pressure	400 bar
Max. Peak Pressure	450 bar
Torque bar	0.65 m.N/bar
Torque at 350 bar	228 m.N
Weight without accessories	11,00 kg
Weight with accessories	11,50 kg
Max. Motor Temperature	-25°
Min. Motor Temperature	110°

Dimensions Size;

2PBM 50

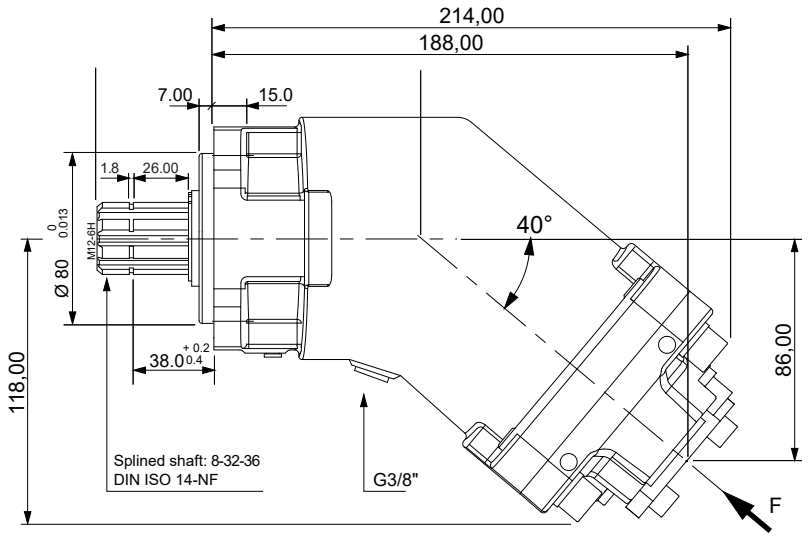

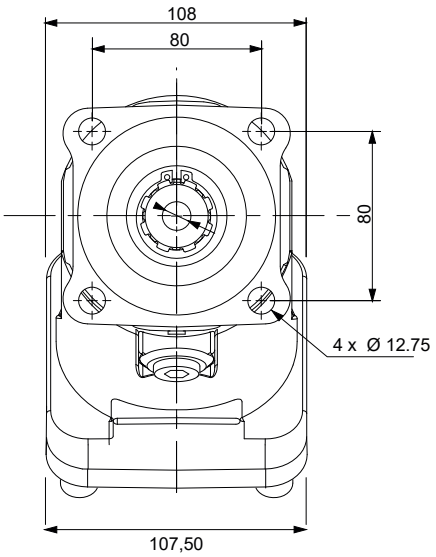

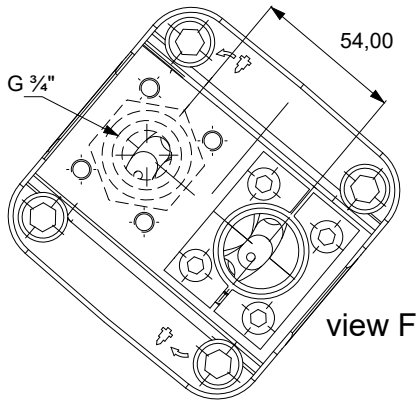

Splined Shaft : 8x32x36 DIN ISO 14 NF

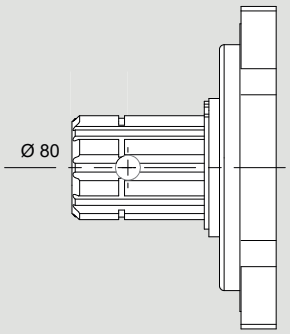

Parallel Keyed Shaft: DIN 6885 10x8x50

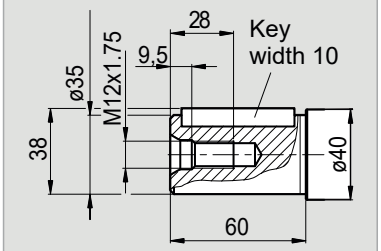

x 1000 rpm	50,00 cc
x 1500 rpm	75,00 cc
Max. Continuous Pump Speed	5000 rpm
Max. Intermittent Pump Speed	5500 rpm
Max. Continuous Pressure	400 bar
Max. Peak Pressure	450 bar
Torque bar	0.80 m.N/bar
Torque at 350 bar	280 m.N
Weight without accessories	11,00 kg
Weight with accessories	11,50 kg
Max. Motor Temperature	-25°
Min. Motor Temperature	110°

Dimensions Size;

2PBM 63

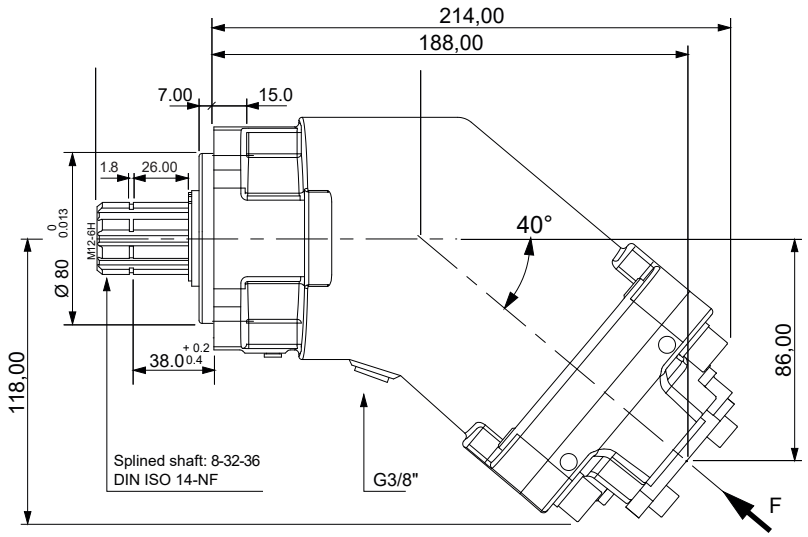

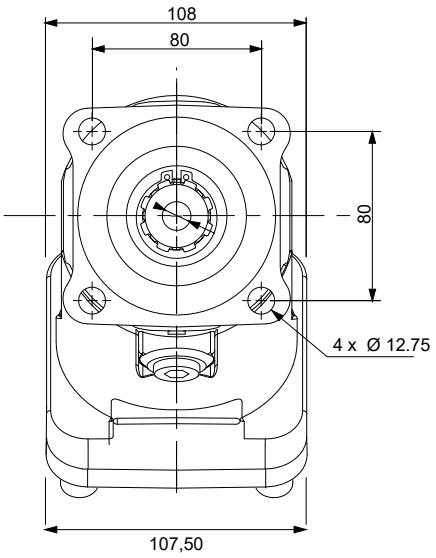

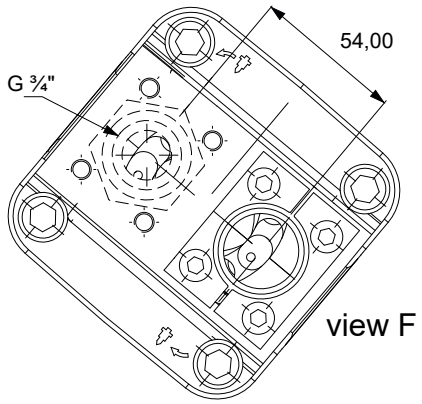

Splined Shaft : 8x32x36 DIN ISO 14 NF

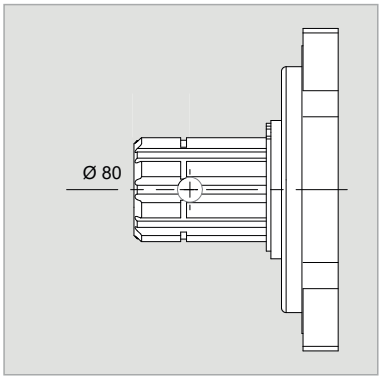

Parallel Keyed Shaft: DIN 6885 10x8x50

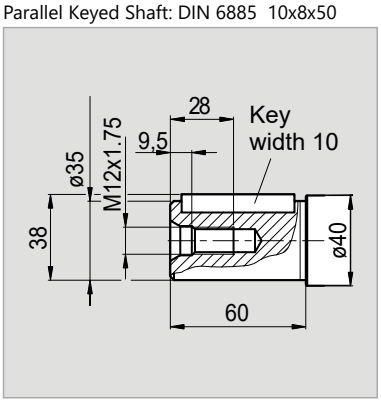

x 1000 rpm	63,00 cc
x 1500 rpm	94,50 cc
Max. Continuous Pump Speed	5000 rpm
Max. Intermittent Pump Speed	5500 rpm
Max. Continuous Pressure	400 bar
Max. Peak Pressure	450 bar
Torque bar	1.00 m.N/bar
Torque at 350 bar	350 m.N
Weight without accessories	12,00 kg
Weight with accessories	12,50 kg
Max. Motor Temperature	-25°
Min. Motor Temperature	110°

Dimensions Size;

2PBM 80

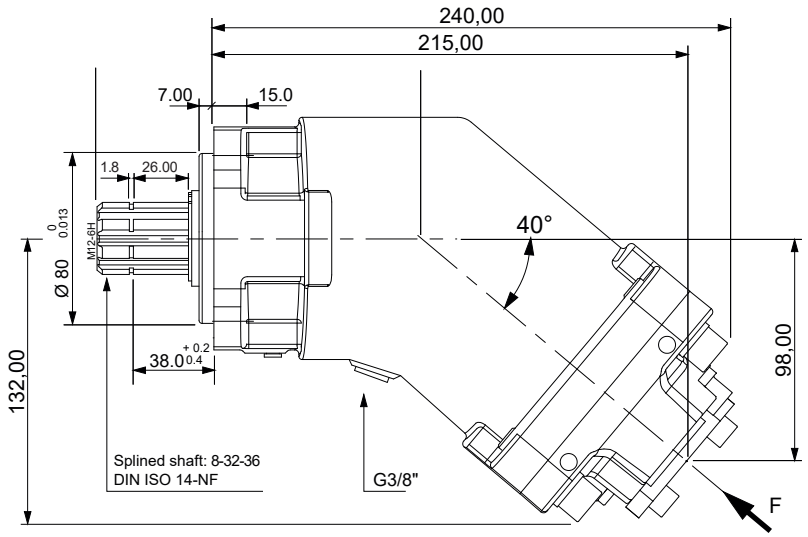

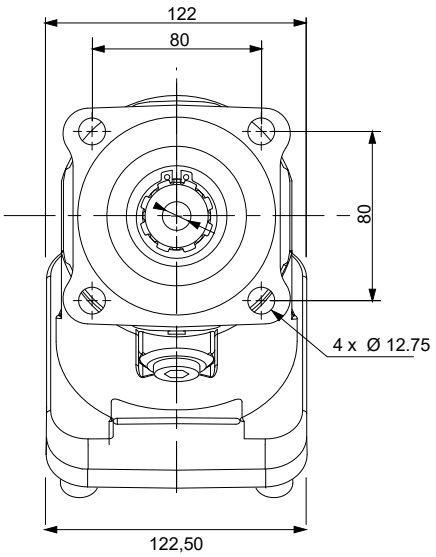

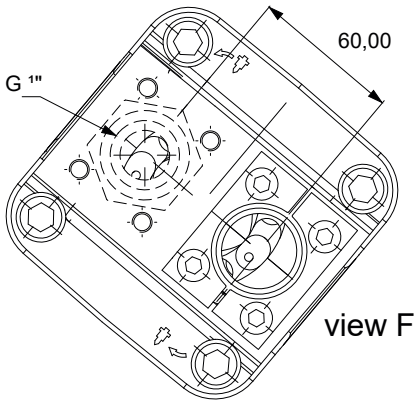

Splined Shaft : 8x32x36 DIN ISO 14 NF

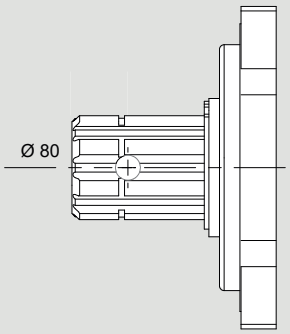

Parallel Keyed Shaft: DIN 6885 10x8x56

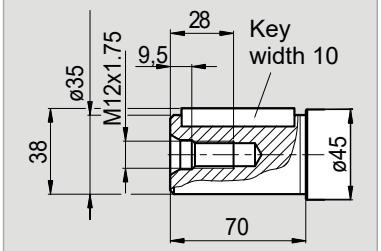

x 1000 rpm	80,00 cc
x 1500 rpm	120,00 cc
Max. Continuous Pump Speed	4400 rpm
Max. Intermittent Pump Speed	4900 rpm
Max. Continuous Pressure	400 bar
Max. Peak Pressure	450 bar
Torque bar	1.28 m.N/bar
Torque at 350 bar	440 m.N
Weight without accessories	15,00 kg
Weight with accessories	15,50 kg
Max. Motor Temperature	-25°
Min. Motor Temperature	110°

Dimensions Size;

2PBM 108

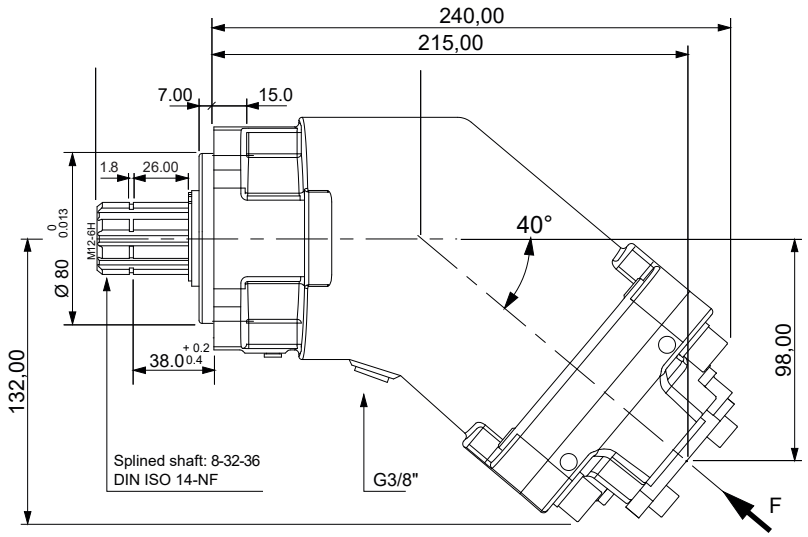

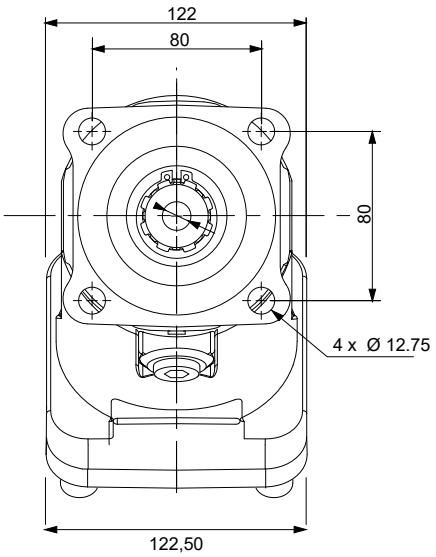

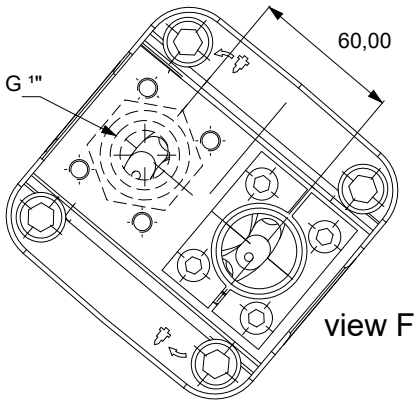

Splined Shaft : 8x32x36 DIN ISO 14 NF

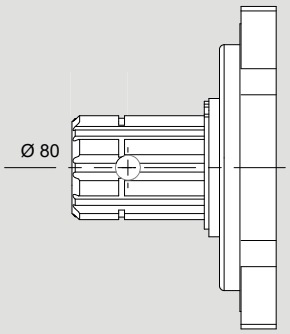

Parallel Keyed Shaft: DIN 6885 12x8x63

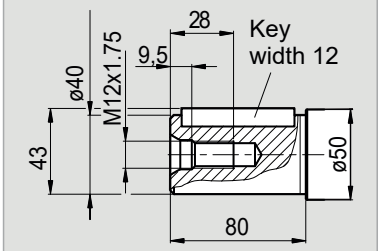

x 1000 rpm	108,40 cc
x 1500 rpm	162,60 cc
Max. Continuous Pump Speed	4000 rpm
Max. Intermittent Pump Speed	4400 rpm
Max. Continuous Pressure	400 bar
Max. Peak Pressure	450 bar
Torque bar	1.69 m.N/bar
Torque at 350 bar	600 m.N
Weight without accessories	16,00 kg
Weight with accessories	16,50 kg
Max. Motor Temperature	-25°
Min. Motor Temperature	110°

Dimensions Size;

2PBM 130

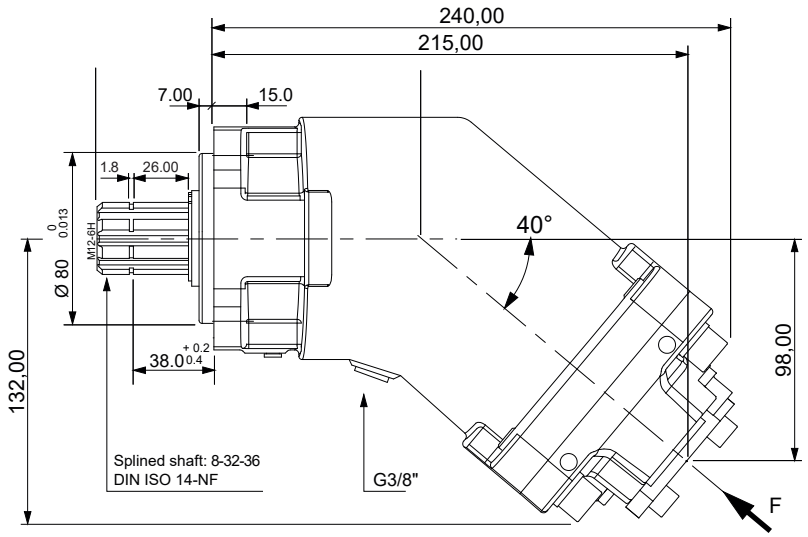

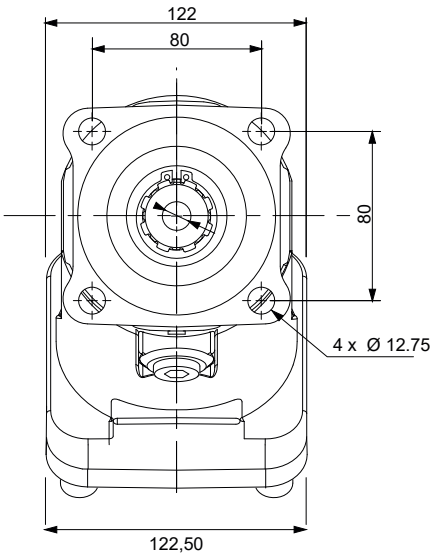

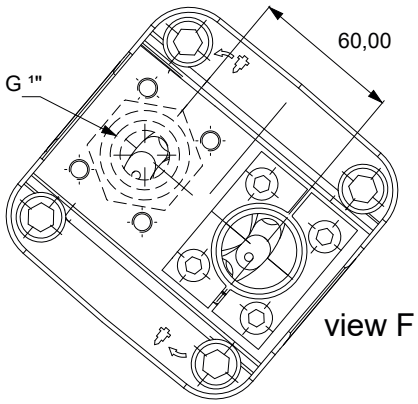

Splined Shaft : 8x32x36 DIN ISO 14 NF

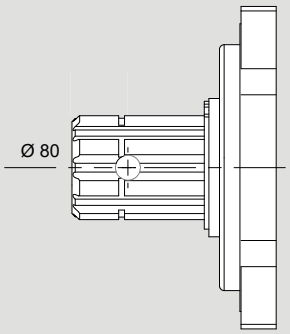

Parallel Keyed Shaft: DIN 6885 12x8x63

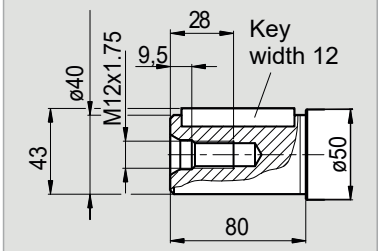

x 1000 rpm	130,00 cc
x 1500 rpm	195,00 cc
Max. Continuous Pump Speed	3400 rpm
Max. Intermittent Pump Speed	4400 rpm
Max. Continuous Pressure	400 bar
Max. Peak Pressure	450 bar
Torque bar	2.10 m.N/bar
Torque at 350 bar	710 m.N
Weight without accessories	16,50 kg
Weight with accessories	17,00 kg
Max. Motor Temperature	-25°
Min. Motor Temperature	110°

Direction of Rotation

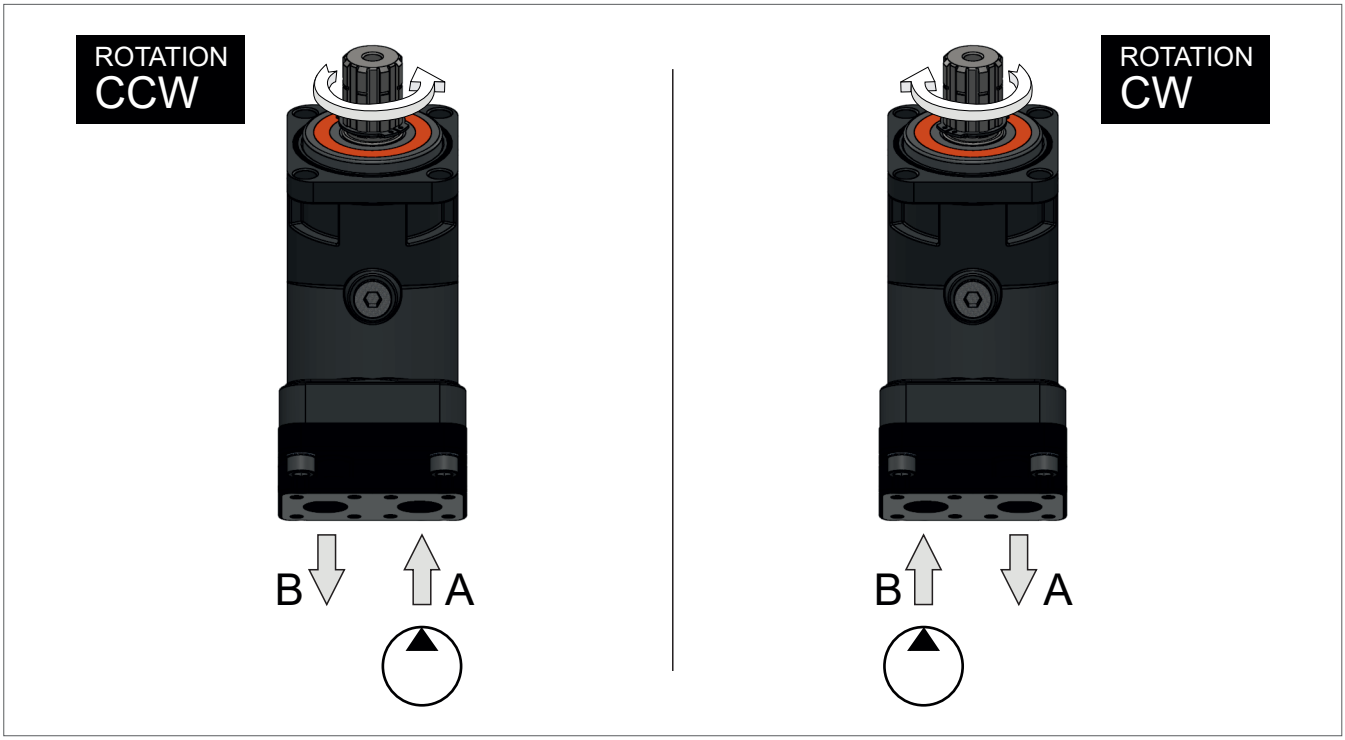

Quick Calculation

Flow rate

$$Q = \frac{V_s \times n}{1000 \eta_v} \text{ (lpm)}$$

TorquePowerSpeed

$$M = \frac{V_s \times \Delta p \times \eta_{mh}}{63} \text{ (Nm)}$$

$$P = \frac{2 \times \pi \times n \times M}{60000} = \frac{n \times M}{9549} = \frac{Q \times \Delta p}{600 \eta_t} \text{ (kw)}$$

$$n = \frac{1000 \times Q \times \eta_v}{V_s} \text{ (lpm)}$$

V_s = Displacement (ccm/rev.)
Δp = Diff. pressure (bar)
n= Speed (rpm)
Q = Flow (lpm)
η_v = Volumetric efficiency
η_{mh} = Mechanical-hydraulic efficiency
η_t = Total efficiency ($\eta_t = \eta_v \times \eta_{mh}$)

Address all questions regarding spare parts to your responsible Our Service Partner or the technical service department of the manufacture's plant / factory for the 2PBM Bent Axis Motors.

ÇELEBİ HİDROCEL OTOM. SAN. TİC. LTD. ŞTİ.
Fevzicakmak Mh. Aslım Cd. Kobisan San. Sit. H Blok No: 67J 42050 Karatay – Konya / TURKEY
Phone : +90 (332) 345 13 70 - +90 (332) 345 13 71
hidrocel@hidrocel.com.tr

Installation

POSITION
2PBM Motors can be operate any position.

DIRECTION OF ROTATION
2PBM Motors can be operate in both directions of rotation.

Before of Installation operation, the motor must be filled with hydraulic fluid and air bled.

INSTALLATION POSITION
See following examples.

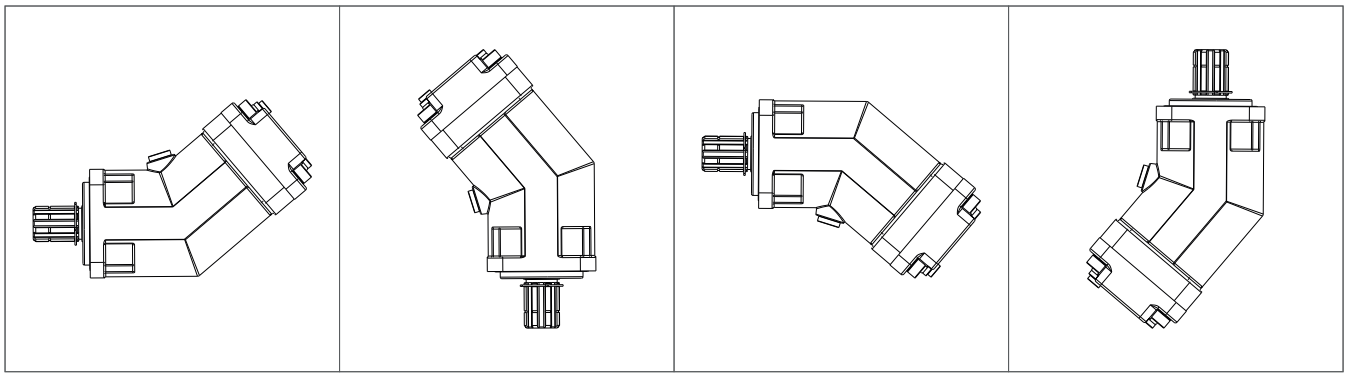

HYDRAULIC FLUID
Recommended ;
Generally : between 15 and 200 cSt.
Maximum : between 5 and 1600 cSt.

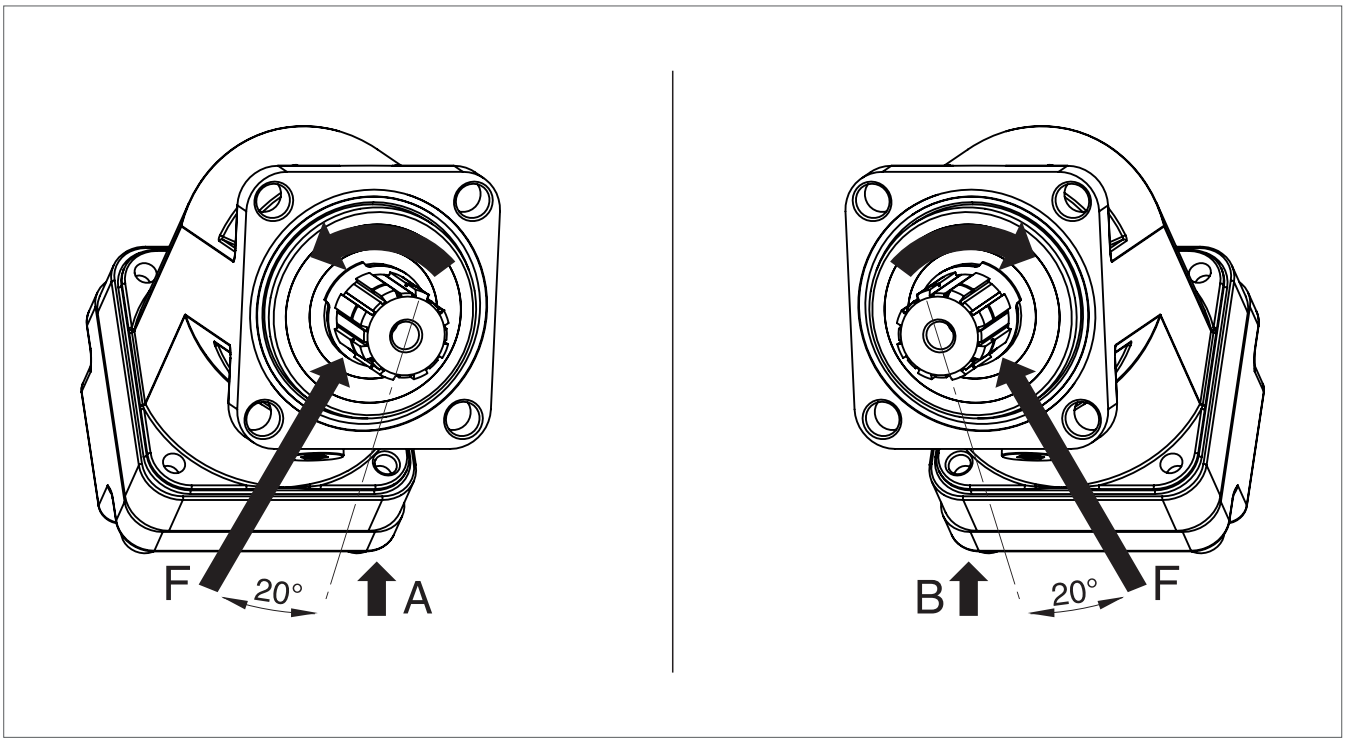

FOR USE;
Available via e-mail on request or each motor is supplied via Starting datasheet.

For detailed information about 2PBM Bent Axis Motors, please contact with Technical Department !!!

Complete Product Range

		Piston Pumps	Piston Motors
DIN	DIN 5462 / ISO 14 8x32x35 8x32x36 DIN 6885	 **2PBA**	 **2PBM**
ISO	ISO 3019-2 (4 BOLTS) DIN 5480 -W25,30,35,40,45 DIN 6885 -Ø20,25,30,35,40,45	 **2PS**	 **2PM**
SAE	SAE B2 C4 - SAE D SAE J498b SAE J 744	 **2PE**	 **2PEM**

Contact

ÇELEBİ HİDROCEL OTOM. SAN. TİC. LTD. ŞTİ.

Fevzicakmak Mh. Aslım Cd. Kobisan San. Sit. H Blok No: 67J
42050 Karatay – Konya / TURKEY

Phone : +90 (332) 345 13 70
+90 (332) 345 13 71
Fax : +90 (332) 345 13 72
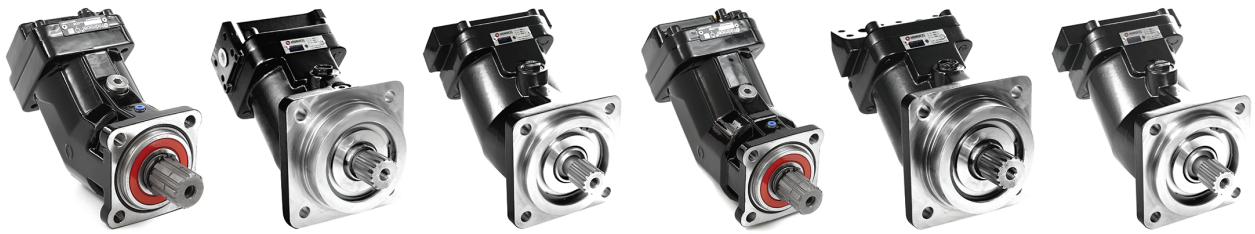
hidrocel@hidrocel.com.tr